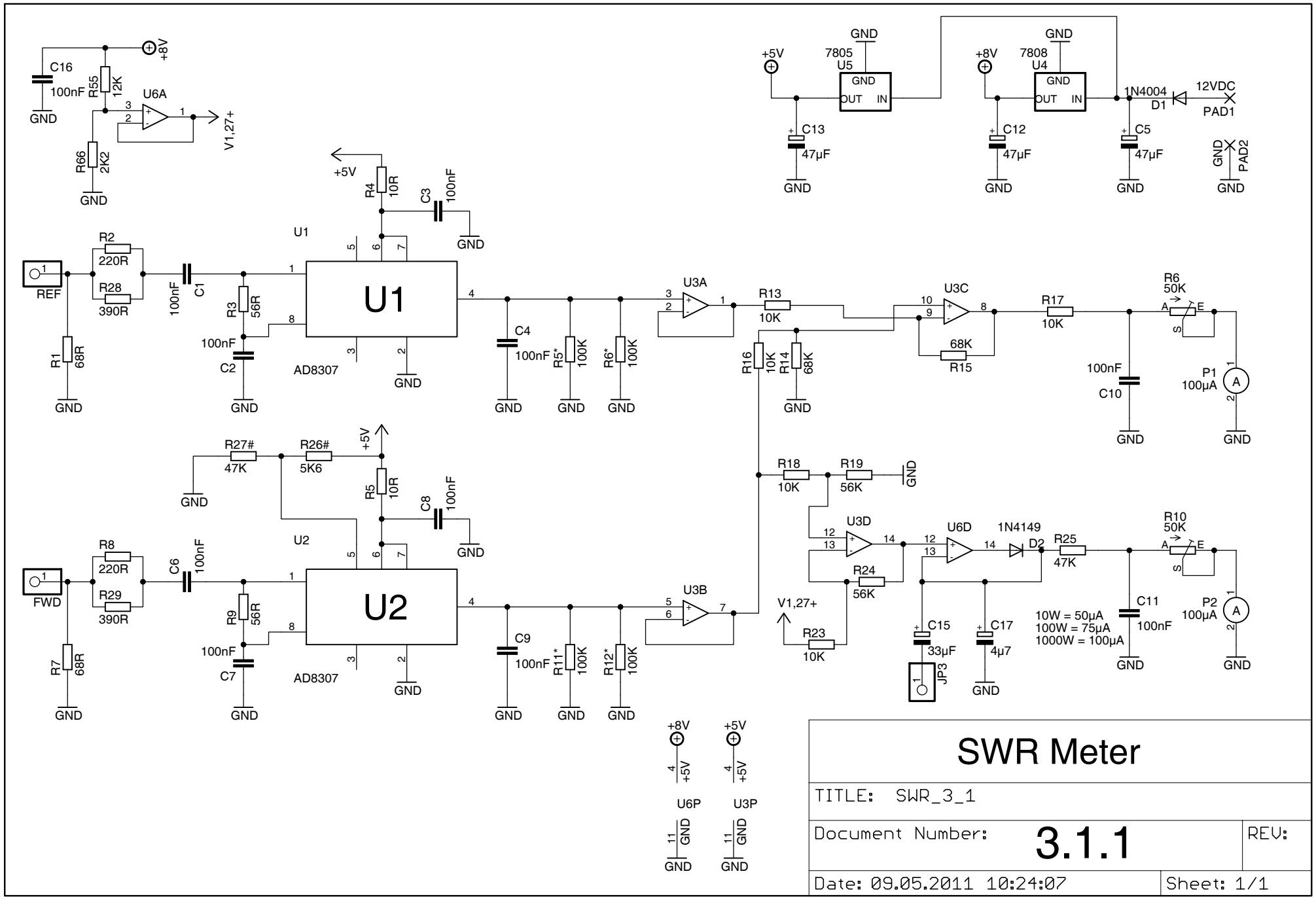
SWR Meter
TITLE: SWR_3_1
Document Number: 3.1.1
REV:
Date: 09.05.2011 10:24:07
Sheet: 1/1
U1
AD8307
U2
AD8307
REF
FWD
PAD1
PAD2
12VDC
1N4004
D1
1N4149
D2
7805
U5
7808
U4
U6A
U3A
U3B
U3C
U3D
U6D
U6P
U3P
V1,27+
P1
100µA
P2
100µA
JP3
10W = 50µA
100W = 75µA
1000W = 100µA
+8V
+5V
GND